Rev #			
Rev #			

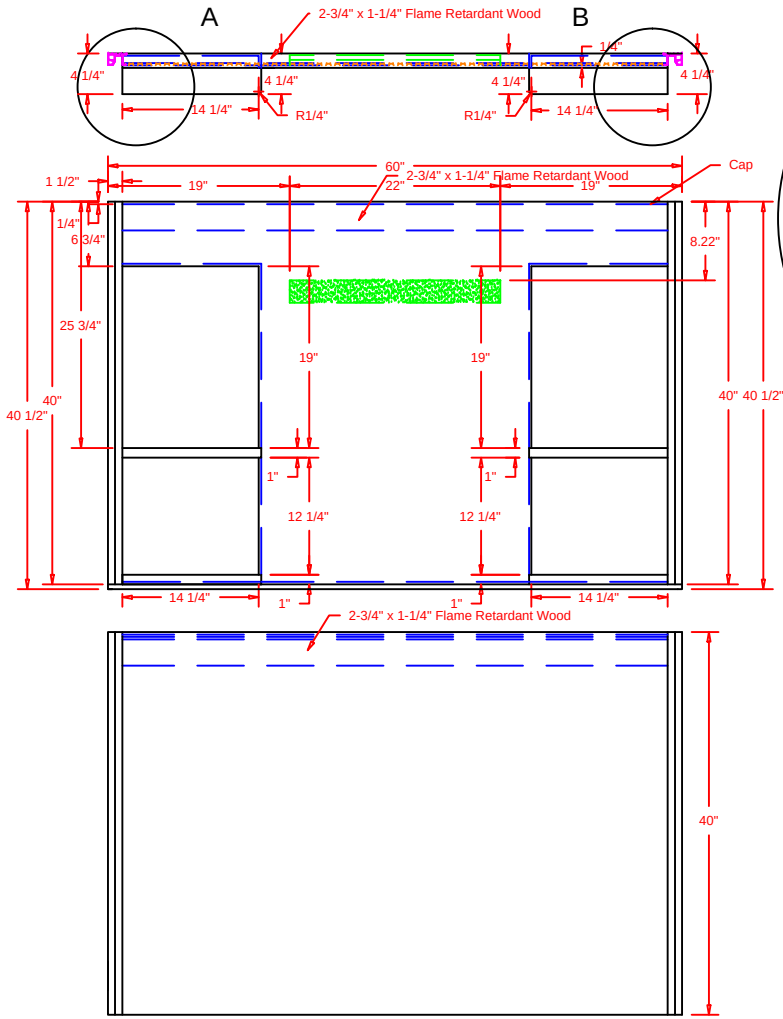

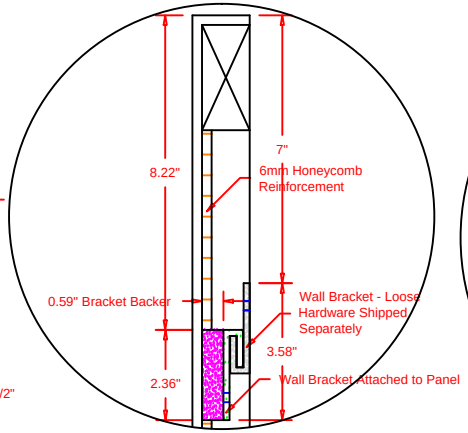

Hanging Rail Detail

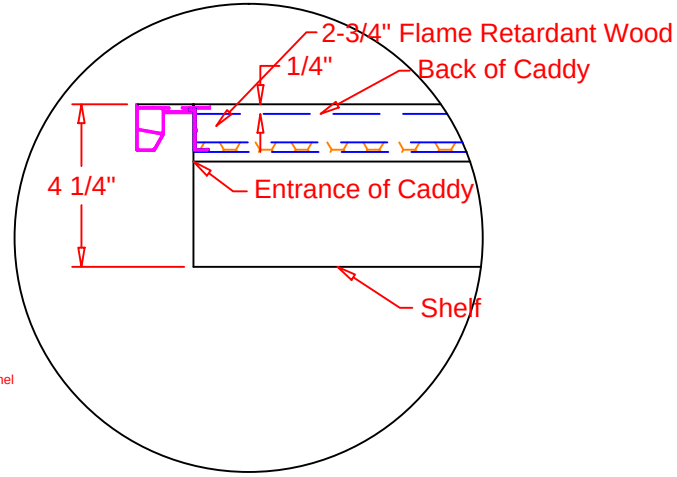

Detail A

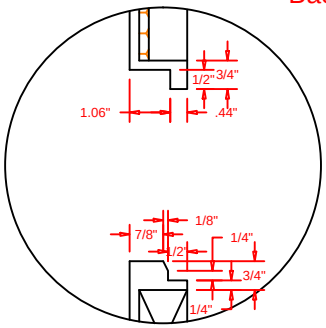

Back Wall Connection Point Detail

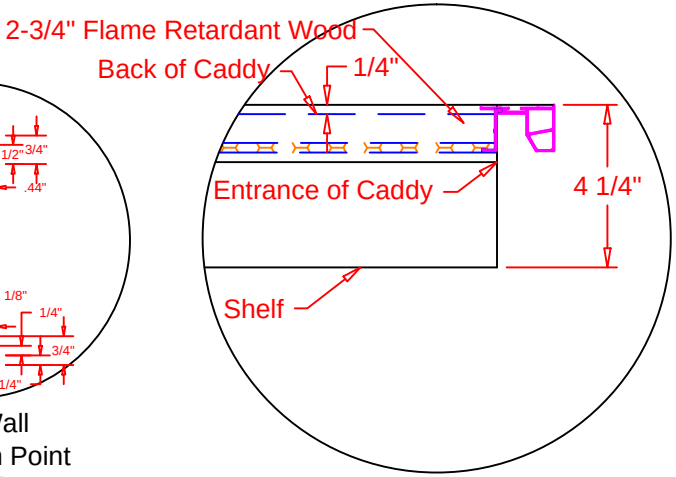

Detail B

transolid™
400 Dietz Road
Warren, OH 44482
330-393-6624
FAX 330-399-4426
www.transolid.com

Part Number:	DB608				
Description:	36" x 60" - Back Wall				
Date Drawn:	12/05/13	Weight:	None	Scale:	None
Drawn By:	Daniel Hollifield			Revised By:	
Approved By:				Date Revised:	

Customer Approval: Date:

Path: @Engineering\2 Commercial\